F54287G-ENG

Three Handles 5-hole Bath & Shower Mixer (Golden)

· Brass Body
· Brass Handle with Swarovski Crystal
· Yiming G3/4 Ceramic Cartridge
· 700mm G3/4 x G1/2 SS Hoses 5pcs
· 2-function Hand Shower (Brass with Swarovski Crystal)
· Neoperl Aerator
· Finish: Golden
· Flow Rate:
Spout: 20L/min @ 0.3MPa
Shower: 12L/min @ 0.3 MPa
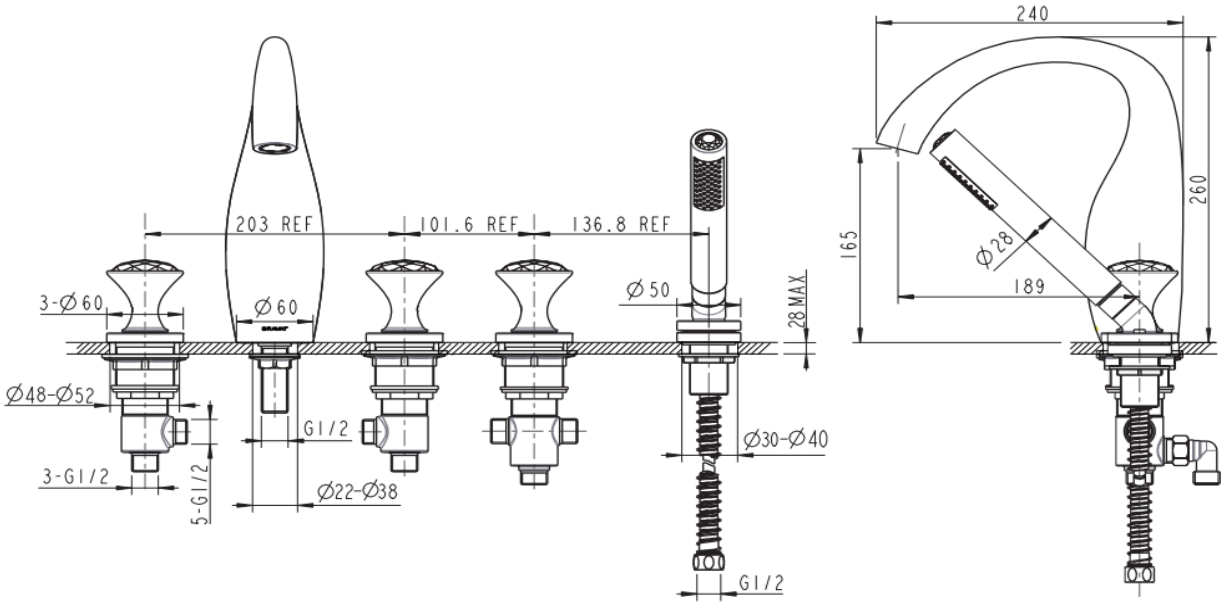
Dwg.