F9173218BW-A-ENG

Single Handle Wall Mounted Shower Bar (w/o Spout)

· Brass Body
· Zinc Handle
· Kerox 35mm Ceramic Cartridge
· Hent Diverter Cartridge(3-Switch)
· 1-function ABS Hand Shower
· Φ203mm 1 funtion Shower Head
· Finish: Black
· Flow Rate : 4.0~9.0L/Min @ 0.1MPa
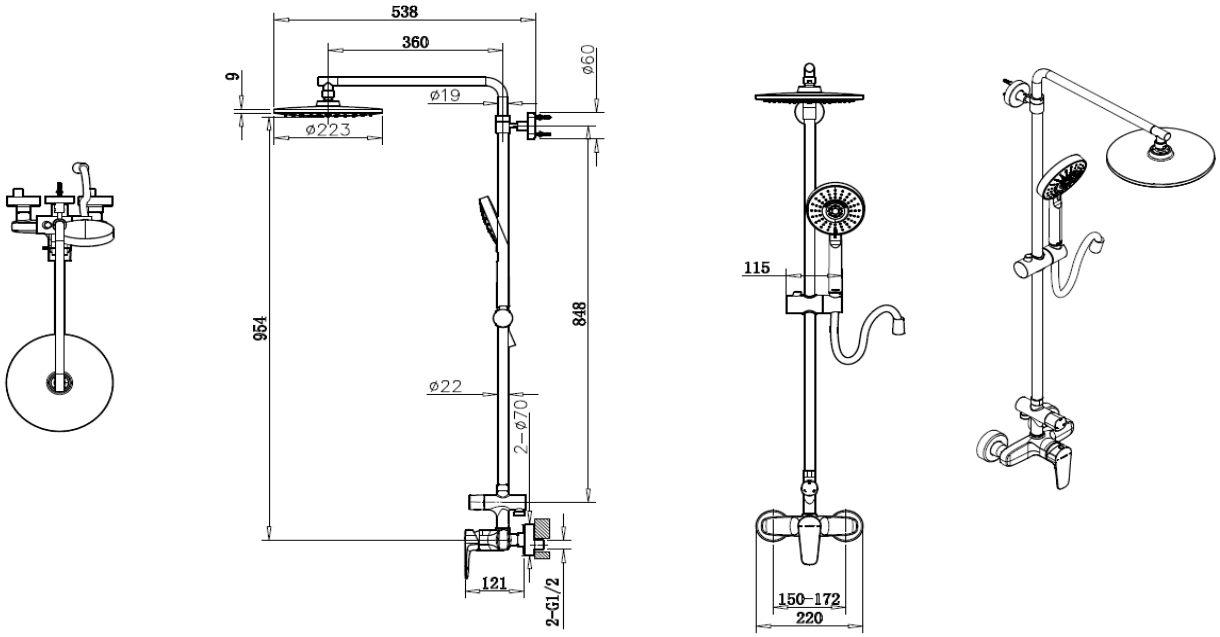
Dwg.